MALE END VIEW (P1)	FEMALE END VIEW (J1)	WIRING DIAGRAM
(LONG) 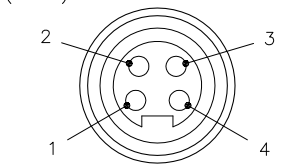	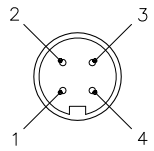	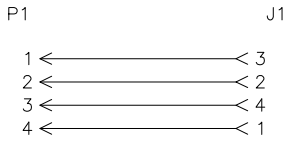
power fast.	M16 connector	

SPECIFICATIONS

CONTACT CARRIER MATERIAL/COLOR	PVC/BLACK (P1), TPU/BLACK (J1)
MOLDED HEAD MATERIAL/COLOR	PVC/BLACK
CONTACT MATERIAL/PLATING	BRASS or COPPER/GOLD
COUPLING NUT MATERIAL/PLATING	BRASS/NICKEL
RATED CURRENT [A]	15 A
RATED VOLTAGE [V]	600 V
TEMPERATURE RANGE	−40°C to +90°C (−40°F to +194°F)

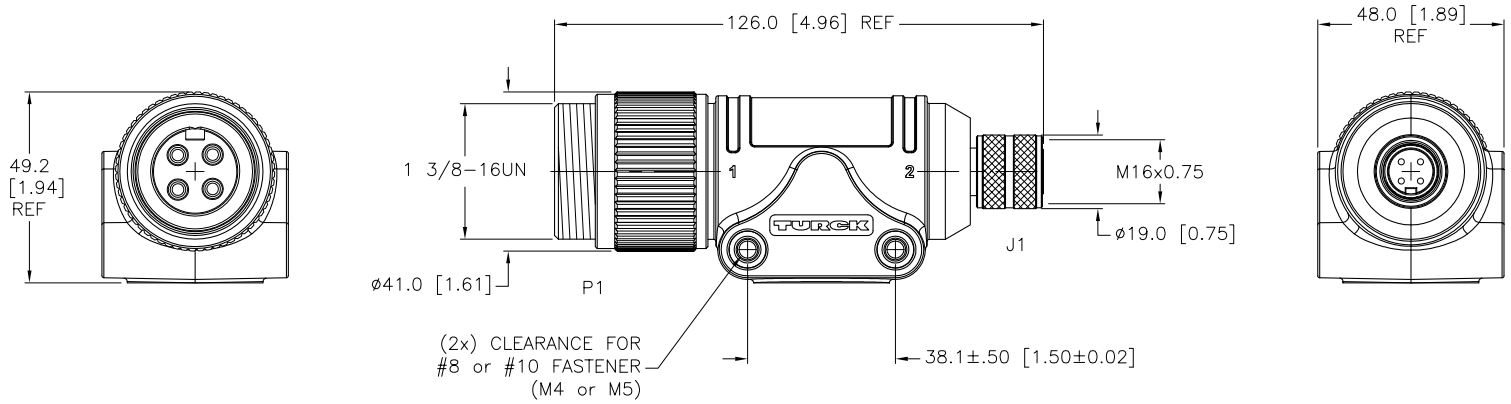

SOURCE DRAWING - FOR REFERENCE ONLY

CAUTION:
RISK OF ELECTRICAL SHOCK
DO NOT DISCONNECT UNDER LOAD

REV	DESCRIPTION	BY	DATE	ECO NO.
C	DRAWING PROCESSED AS PART OF ECO 33971	CBM	04/07/11	33971

RELATED DOCUMENTS
1.
2.
3.
4.

3RD ANGLE PROJECTION

THIS DRAWING IS PROPERTY OF TURCK INC. USE OF THIS DOCUMENT WITHOUT WRITTEN PERMISSION IS PROHIBITED.

TURCK INC
High Technology Sensors and Automation Controls

3000 CAMPUS DRIVE
MINNEAPOLIS, MN 55441
1−800−544−7769
(763) 553−7300
(763) 553−0708 fax
turck.com

MATERIAL: SEE SPECIFICATIONS

FINISH: SEE SPECIFICATIONS

ALL DIMENSIONS DISPLAYED ON THIS DRAWING ARE FOR REFERENCE ONLY

CONTACT TURCK FOR MORE INFORMATION

DRFT: RWC | DATE: 07/17/09
DSGN | SCALE: 1=2.0

UNIT OF MEASUREMENT
MILLIMETER [INCH]
DO NOT SCALE THIS DRAWING

DESCRIPTION: GSDM BKM 44−0

IDENTIFICATION NO.: U2−14804 | REV: C

FILE: U2−14804 | SHEET 1 OF 1